Menu

INTERPUMP GROUP

Pratissoli

KT16 - KT18 - KT20 - KT22
WK525 - WK530

Use and Maintenance manual

INDEX

1. INTRODUCTION 4

2. DESCRIPTION OF SYMBOLS 4

3. SAFETY 5

3.1 General safety warnings....5
3.2 Essential safety in the high pressure system. 5
3.3 Safety during work....5
3.4 Rules of conduct for the use of lances. 5
3.5 Safety during system maintenance....6

4. PUMP IDENTIFICATION 6

5. TECHNICAL CHARACTERISTICS 7

6. DIMENSIONS AND WEIGHT 7

7. OPERATING INSTRUCTIONS 8

7.1 Water temperature....8
7. 2 Maximum pressure and flow rate....8
7. 3 Minimum rotating speed....8
7.4 Sound emission....8
7.5 Vibrations 8
7.6 Brands and types of oils recommended 9

8. PORTS AND CONNECTIONS 11

9. PUMP INSTALLATION 12

9.1 Installation 12
9.2 Rotation direction 13
9.3 Version change 13
9.4 Hydraulic connections 14
9.5 Pump power supply 14
9.6 Suction line 14
9.7 Filtration 15
9.8 Outlet line 16
9.9 Calculation of the internal diameter of the duct pipes. 17
9.10 V-belt transmission....18
9.11 Transmission definition 18
9.12 Definition of static pull to apply on belts....20
9.13 Transmission of power from the second PTO....22

10. START-UP AND OPERATION 23

10.1 Preliminary checks....23
10.2 Start-up 23

11. PREVENTIVE MAINTENANCE 24

12. PUMP STORAGE 25

12.1 Long-term inactivity 25
12.2 Method for filling pump with anti-corrosion emulsion or anti-freeze solution....25

13. PRECAUTIONS AGAINST FROST 25

14. GUARANTEE CONDITIONS 25

15. OPERATING FAULTS AND THEIR POSSIBLE CAUSES **26**

16. EXPLODED DRAWING AND PARTS LIST **27**

17. FLUSHING CIRCUIT DIAGRAM OF USE **29**

Adhere to the following values for proper system operation: **29**

18. DECLARATION OF INCORPORATION **30**

1. INTRODUCTION

This manual describes the instructions for use and maintenance of KT-WK HIGH-PRESSURE version pumps and should be carefully read and understood before using the pump.
Proper pump operation and duration depend on the correct use and maintenance.
Interpump Group disclaims any responsibility for damage caused by negligence or failure to observe with the standards described in this manual.
Upon receipt, verify that the pump is intact and complete.
Report any faults before installing and starting the pump.

2. DESCRIPTION OF SYMBOLS

Warning Sign

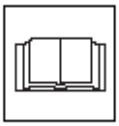

Read the contents of this manual carefully before each operation.

Danger sign
Danger of electrocution.

Danger sign
Wear a protective mask.

Danger sign
Wear protective goggles.

Danger sign
Put on protective gloves before each operation.

Danger sign
Wear appropriate footwear

3. SAFETY

3.1 General safety warnings

Improper use of pumps and high pressure systems as well as non-compliance with installation and maintenance standards can cause serious damage to people and/or property. Anyone assembling or using high pressure systems must possess the necessary competence to do so, knowing the characteristics of the components that will assemble/use and take all precautions necessary to ensure maximum safety in all conditions of use. In the interest of safety, both for the Installer and the Operator, no reasonably applicable precaution should be omitted.

3.2 Essential safety in the high pressure system.

1. The pressure line must always be provided with a safety valve.
2. High pressure system components, particularly for systems that operate primarily outside, must be adequately protected from rain, frost and heat.
3. The electrical control system must be adequately protected against sprays of water and must meet specific regulations in force.
4. The high pressure pipes must be properly sized for maximum operating pressure of the system and always and only used within the operating pressure range specified by the Manufacturer of the pipe itself.
   The same rules should be observed for all other auxiliary systems affected by high pressure.
5. The ends of high pressure pipes must be sheathed and secured in a solid structure, to prevent dangerous whiplash in case of bursting or broken connections.
6. Appropriate protective casing must be provided in pump transmission systems (couplings, pulleys and belts, auxiliary power outlets).

3.3 Safety during work.

The room or area within which the high pressure system operates must be clearly marked and prohibited to unauthorised personnel and, wherever possible, restricted or fenced. Personnel authorised to access this area should first be instructed how to operate within this area and informed of the risks arising from high pressure system defects or malfunctions.

Before starting the system, the Operator is required to verify that:

1. The high pressure system is properly powered, see chapter 9 section 9.5.
2. The pump suction filters are perfectly clean; it is appropriate to include a device indicating the clogging level on all devices.
3. Electrical parts are adequately protected and in perfect condition.
4. The high pressure pipes do not show signs of abrasion and the fittings are in perfect order

Any fault or reasonable doubt that may arise before or during operation should be promptly reported and verified by qualified personnel. In these cases, pressure should be immediately cleared and the high pressure system stopped.

3.4 Rules of conduct for the use of lances.

1. The Operator must always place his safety and security first, as well as that of others that may be directly affected by his/her actions, or any other assessments or interests. The Operator's work must be dictated by common sense and responsibility.
2. The Operator must always wear a helmet with a protective visor, waterproof gear and wear boots that are appropriate for use and can ensure a good grip on wet floors.

Note: appropriate clothing will protect against sprays of water but not from direct impact with jets of water or very close sprays. Additional protections may therefore be necessary in certain circumstances

3. It is generally best to organise personnel into teams of at least two people capable of giving mutual and immediate assistance in case of necessity and of taking turns during long and demanding operations.
4. The work area jet range must be absolutely prohibited to and free from objects that, inadvertently under a pressure jet, can be damaged and/or create dangerous situations.
5. The water jet must always and only be pointed in the direction of the work area, including during preliminary tests or checks.
6. The Operator must always pay attention to the trajectory of debris removed by the water jet. Where necessary, suitable guards must be provided by the Operator to protect anything that could become accidentally exposed.
7. The operator should not be distracted for any reason during work. Workers needing to access the operating area must wait for the Operator to stop work on his/her own initiative, after which they should immediately make their presence known.
8. It is important for safety that all team members are always fully aware of each other's intentions in order to avoid dangerous misunderstandings.
9. The high pressure system must not be started upand run under pressure without all team members in position and without the Operator having already directed his/her lance toward the work area.

3.5 Safety during system maintenance

1. High pressure system maintenance must be carried out in the time intervals set by the manufacturer who is responsible for the whole group according to law.
2. Maintenance should always be performed by trained and authorised personnel.
3. Assembly and disassembly of the pump and the various components must only be carried out by authorised personnel, using appropriate equipment in order to prevent damage to components, in particular to connections.
4. Always only use original spare parts to ensure total reliability and safety.

4. PUMP IDENTIFICATION

Each pump has its own serial number XX.XXX.XXX, see point ① and a specification label, see point ② of fig. 1 which shows:
Pump model and version
Max revs.
Absorbed power Hp – kW
Flow rate l/min – Gpm .
Pressure bar– PSI

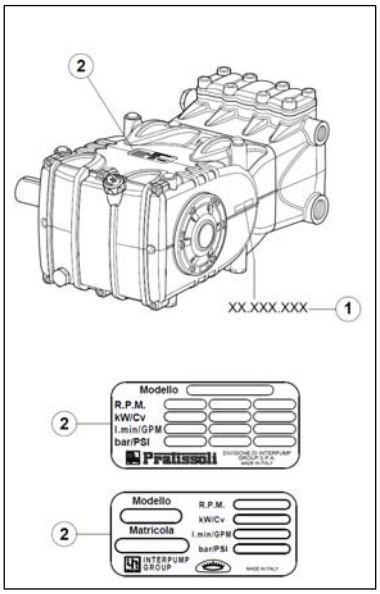

Model, version and serial number must always be indicated when ordering spare parts.

5. TECHNICAL CHARACTERISTICS

Model	Rpm/1'	Flow rate		Pressure		Power	
		l/min	Gpm	bar	psi	kW	Hp
KT 16	1750	27.4	7.24	500	7250	26.2	35.6
KT 18	1450 1750	28.8 34.7	7.60 9.16	500 400	7250 5800	27.5 26.5	37.4 36.1
KT 20	1450 1750	35.5 42.9	9.40 11.33	400 320	5800 4640	27.1 26.2	36.9 35.6
KT 22	1450 1750	43.0 51.9	11.36 13.70	320 250	4640 3625	26.3 24.8	35.7 33.7
WK525	1450	22	5.80	500	7250	21.03	28.6
WK530	1450	29	7.7	500	7250	27.73	37.7

6. DIMENSIONS AND WEIGHT

For Standard Version pump dimensions and weight, refer to fig. 2

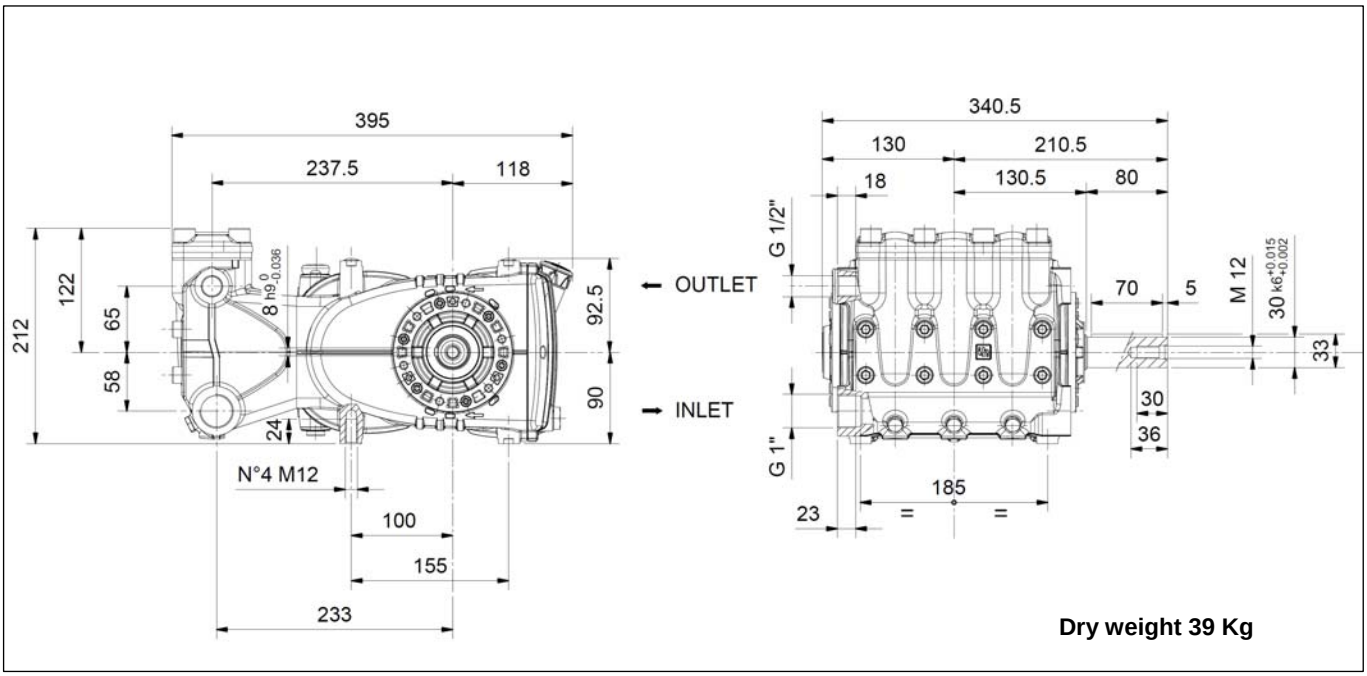

fig. 2

7. OPERATING INSTRUCTIONS

The KT HIGH PRESSURE version pumps have been designed to operate in environments with atmospheres that are not potentially explosive, with filtered water (see point 9.7) and at a maximum temperature of 40°C. Other liquids can be used only upon formal approval by the Technical or Customer Service ***Departments.***

7.1 Water temperature
The maximum permissible water temperature is 40°C. However, the pump can be used with water up to a temperature of 60°C, but only for short periods. In this case, it is best to consult the ***Technical or Customer Service Departments.***

7. 2 Maximum pressure and flow rate
The rated specifications stated in our catalogue are the Max. that can be obtained the pump. **Independently** of the power used, the maximum pressure and rpm indicated in the specification label can never be exceeded unless upon prior formal authorisation by our ***Technical or Customer Service Departments.***

7. 3 Minimum rotating speed
Any rotating speed other than that indicated in the performance table (see chapter 5) must be expressly formally authorised by our ***Technical or Customer Service Departments.***

7.4 Sound emission
The sound pressure detection test was performed according to Directive 2000/14 of the European Parliament and Council (Machinery Directive) and EN-ISO 3744-1995 with class instrumentation 1.
A final detection of sound pressure must be performed on the machine/complete system.
Should the operator be located at a distance of less than 1 metre, he will have to use appropriate hearing protection according to current regulations.

7.5 Vibrations
The detection of this value shall be carried out only with the pump set up on the plant and at the performance declared by the customer.
Values must be in accordance with regulations.

7.6 Brands and types of oils recommended

The pump is supplied with oil suitable for room temperatures from 0°C to 30°C.
some types of recommended oil are indicated in the table below, these oils have additives to increase corrosion resistance and fatigue resistance (DIN 51517 part 2).
Alternatively you can also use Automotive Gear SAE 85W-90 oil for gearing lubrication.

Hersteller Manufacturer Producteur	Schmieröl Lubricant Lubrifiant
Agip	AGIP ACER 220
ARAL	Aral Degol BG 220
BP	BP Energol HLP 220
Castrol	CASTROL HYSPIN VG 220, CASTROL MAGNA 220
DEA	Falcon CL 220

Hersteller Manufacturer Producteur	Schmieröl Lubricant Lubrifiant
elf	ELF POLYTELIS 220, REDUCTELF SP 220
Esso	NUTO 220, TERESSO 220
FINA	FINA CIRKAN 220
FUCHS	RENOLIN 212, RENOLIN DTA 220
Mobil	Mobil DTE Oil BB

Hersteller Manufacturer Producteur	Schmieröl Lubricant Lubrifiant
Shell	Shell Tellus Öl C 220
SIRS	Wintershall Ersolan 220, Wintershall Wiolan CN 220
TEXACO	RANDO HD 220
TOTAL	TOTAL Cortis 220

Check the oil level, refill if necessary
From the oil dipstick pos. ①, fig .3.
The correct checking of the oil level is made with the pump not running, at room temperature. The oil change must be made with the pump at working temperature, removing the oil dipstick pos. ①, and then the drain plug pos. ②, fig. 3 .
The oil check and change must be carried out as indicated in the table in fig. 14 chapter 11.
The quantity required is ~ 2 litres.

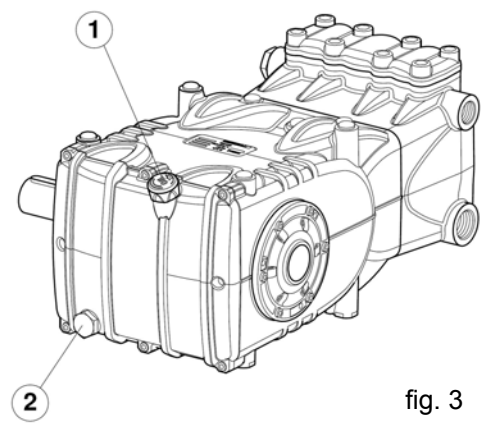

fig. 3

In any case the oil must be changed at least once a year, as it is degraded by oxidation.

For a room temperature other than between 0°C - 30°C, follow the instructions in the following diagram, considering that oil must have a minimum viscosity of 180 cSt.

Viscosity / Room temperature Diagram

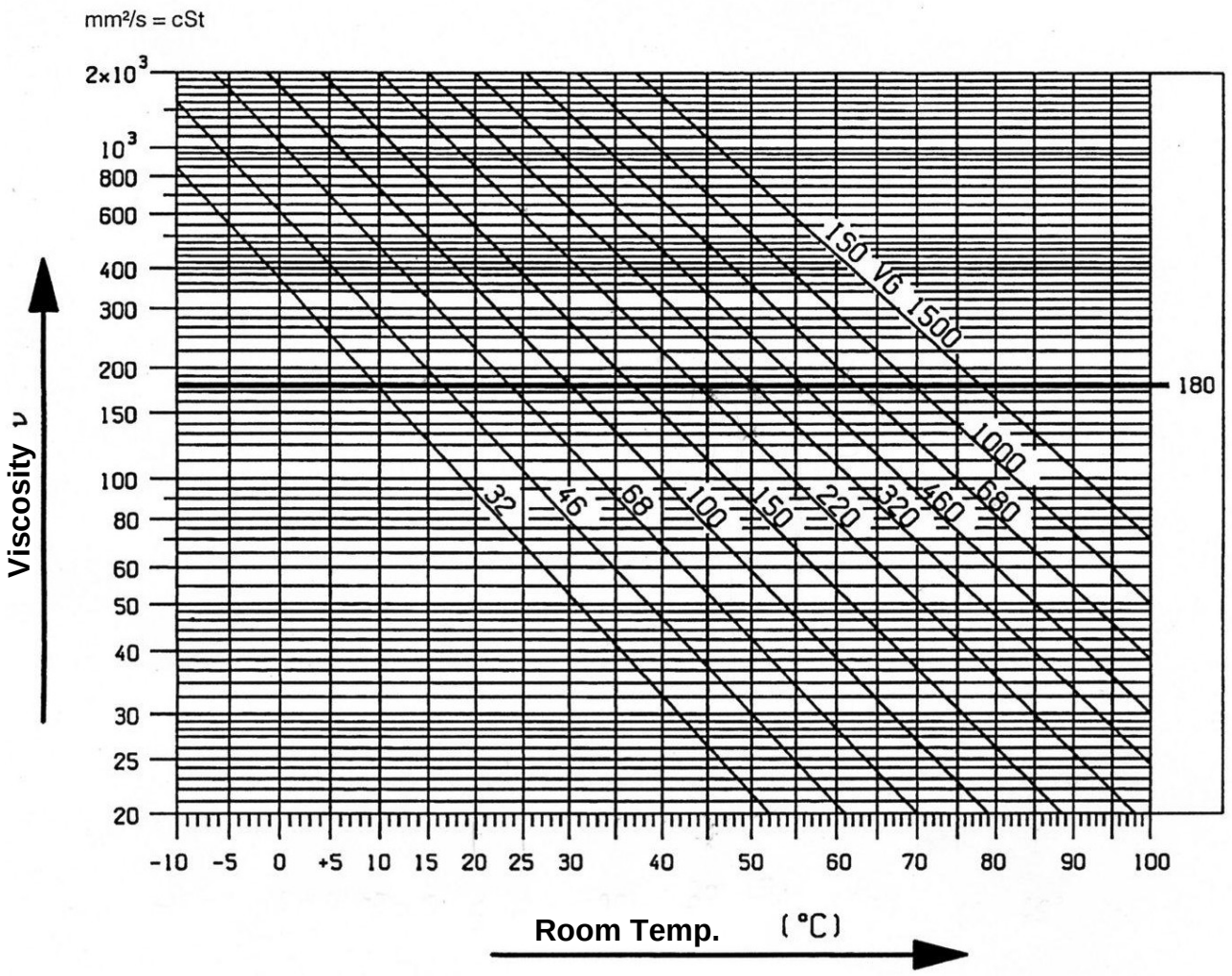

The oil must be placed in a suitable container and disposed of in special centres. It absolutely should not be discarded into the environment.

8. PORTS AND CONNECTIONS

KT HIGH PRESSURE version pumps (see figure 4) are equipped with:

① 2 “IN" inlet ports 1" Gas.
Line connection to any of the two ports is indifferent for proper pump functioning.
The unused ports must be hermetically closed.

② 2 “OUT“ outlet ports 1/2" Gas .

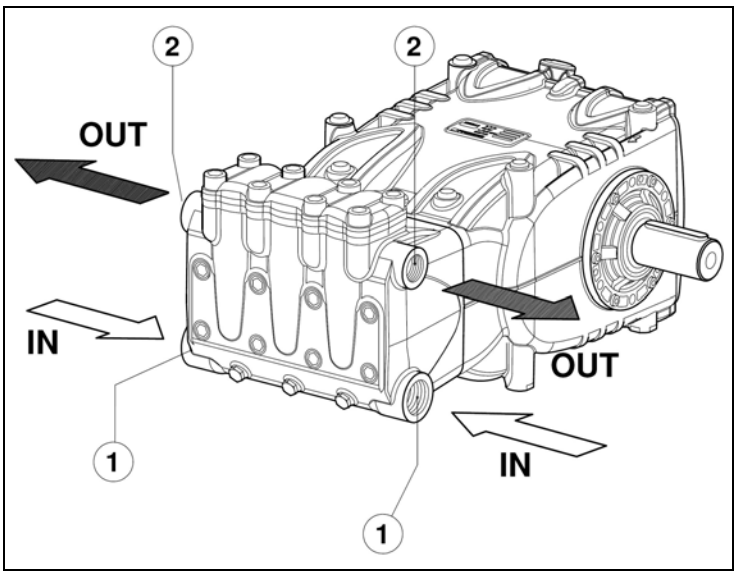

fig. 4

9. PUMP INSTALLATION

9.1 Installation
The pump must be fixed horizontally using the M 16x1.5 threaded support feet.
M 12x1.5 threaded support feet. Tighten the screws with a torque of 80 Nm.
The base must be perfectly flat and rigid enough as not to allow bending or misalignment on the pump coupling axis/transmission due to torque transmitted during operation.
The unit cannot be fixed rigidly to the floor but must interposed with vibration dampers.
For special applications contact the ***Technical or Customer Service Departments.***

A lifting bracket is mounted on the pump for easy installation, as per the figure below.

Replace the oil filling hole closing service plug (red) positioned on the rear casing cover. Check the correct quantity with the oil dipstick.
The oil dipstick must always be reachable, even when the unit is assembled.

The pump shaft (PTO) should not be rigidly connected to the propulsor unit
The following types of transmission are recommended:
- Hydraulics by flange, for proper application consult with our ***Technical*** or Customer Service ***Departments.***
- V-belt.
- Cardan-shaft (comply with manufacturer's Max. recommended working angles) .
- Flexible joint .

9.2 Rotation direction
The rotation direction is indicated by an arrow located on the casing near the drive shaft.
From a position facing the pump head, the rotation direction will be as in fig. 5

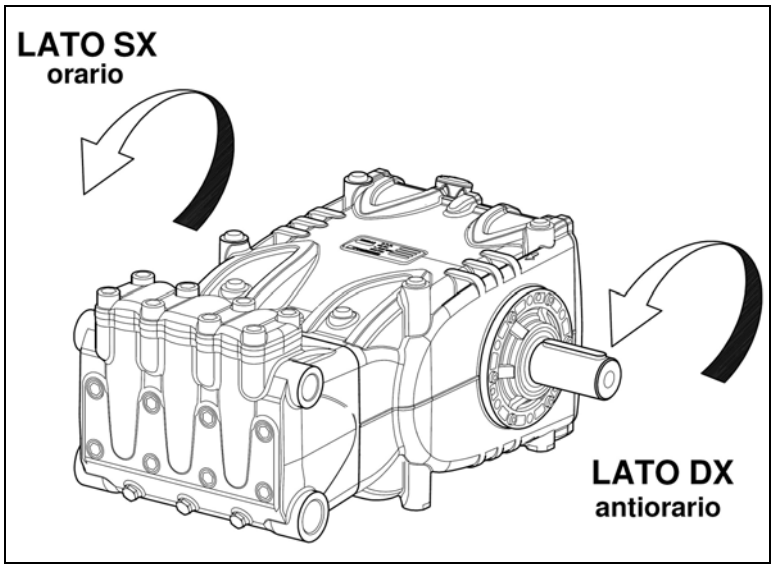

fig. 5

9.3 Version change
The pump version is defined as right when:
Observing the pump facing the head side, the pump shaft must have a PTO shank on the right side.

The pump version is defined as left when:
Observing the pump facing the head side, the pump shaft must have a PTO shank on the left side.

Note. The version shown in fig. 5 is right.

The version can only be modified by trained and authorised personnel and carefully following the instructions below:

1. Separate the hydraulic part from the mechanical part as indicated in chapter 2 section 2.2.1 of the repair manual.

2. Turn the mechanical part 180° and reposition the rear casing cover in such a way that the oil dipstick is turned upward. Reposition the lifting bracket and relative hole closing plugs in the upper part of the casing. Finally, properly reposition the specification label in its housing on the casing.
   Make sure that the lower casing draining holes in correspondence with the pistons are open and not closed from the plastic plugs provided for the previous version.

3. Unite the hydraulic part to the mechanical part as indicated in chapter 2 section 2.2.5 of the repair manual.

9.4 Hydraulic connections
In order to isolate the system from vibrations produced by the pump, it is advisable to make the first section of the duct adjacent to the pump (both suction and outlet) with flexible piping. The consistency of the suction section must be such as to prevent deformations caused by vacuums produced by the pump.

9.5 Pump power supply
A positive head of at least 0.2 metres is required for the best volumetric efficiency.

For negative prevalence contact our Technical or Customer Service Departments .

9.6 Suction line
For a smooth operation of the pump, the suction line should have the following characteristics:

1. Minimum internal diameter as indicated in the graph at point 9.9 and equal to or exceeding that of the pump head.

Localised restrictions should be avoided along the run of the duct, as these can cause load losses resulting in cavitation. Avoid 90° elbow bends, connections with other piping, constrictions, counterslopes, inverted U-curves and T-connections.

2. With a layout that is set in such a way to prevent cavitation.
3. Completely airtight and constructed to ensure sealing over time.
4. Prevents that pump stopping causes emptying, even partial.
5. Do not use 3 or 4-way hydraulic fittings, adapters, swivel joints, etc. as they could jeopardise pump performance.
6. Do not install Venturi tubes or injectors for detergent suction.
7. Avoid use of base valves or other types of unidirectional valves.
8. Do not recirculate by-pass valve discharge directly into suction.
9. Provide for proper guards inside the tank to prevent that water flow from the bypass and the tank supply line can create vortexes or turbulence near the pump supply pipe port.

10. Make sure the suction line is thoroughly clean inside before connecting it to the pump.

9.7 Filtration
1 filter must be installed on the pump suction line, positioned as indicated in fig. 6 and fig. 6/a.

With a manually activated control valve

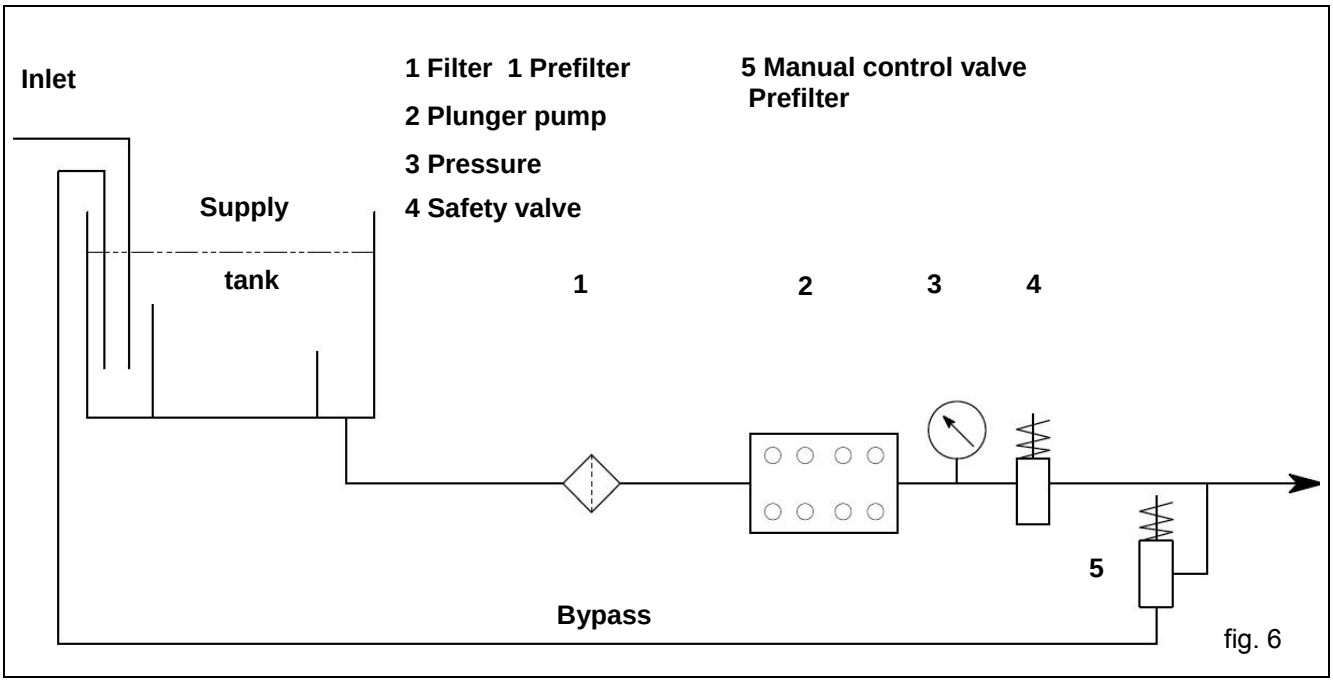

fig. 6

With a pneumatically activated control valve

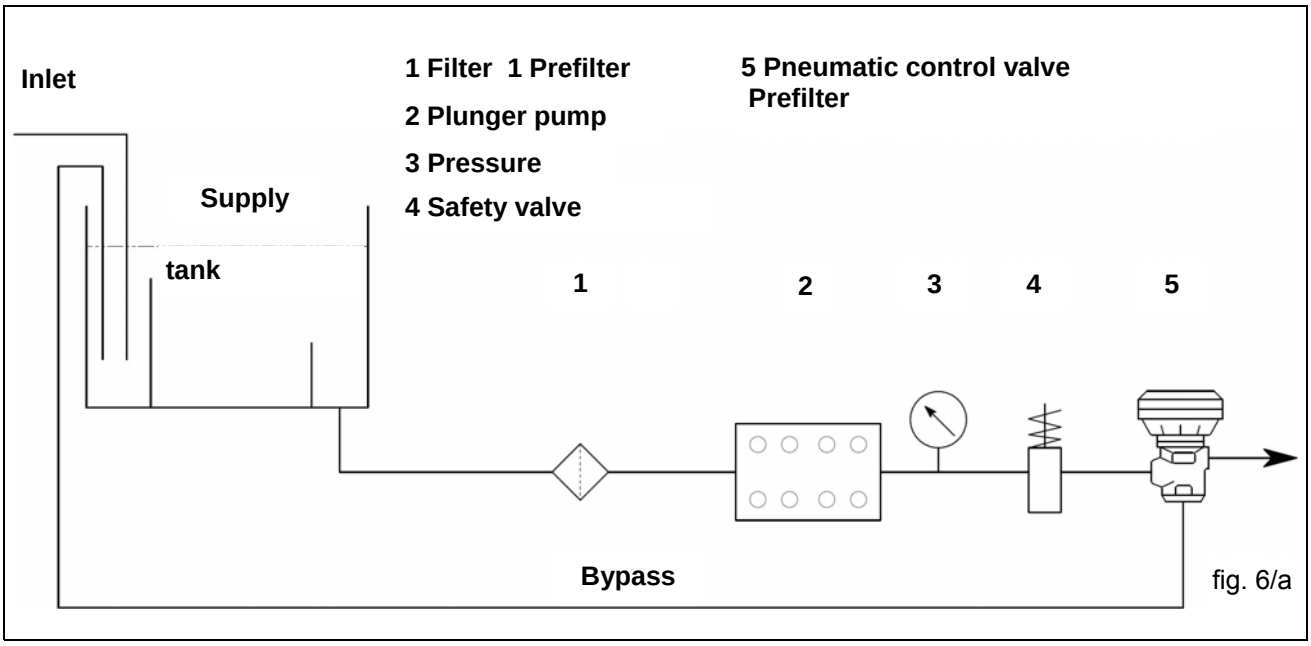

fig. 6/a

The filter must be installed as close as possible to the pump, it must be easily inspected and must have the following characteristics:

1. Minimum flow rate at least 3 times the nominal flow rate of the pump.
2. Inlet/outlet port diameters no smaller than the inlet port diameter of the pump.
3. Filtration grade between 200 and 360 µm .

For smooth pump operation, regular filter cleaning is necessary, planned according to the actual use of the pump in relation to the quality of water used and actual clogging conditions.

9.8 Outlet line

For the correct laying of the outlet line, the following installation rules must be followed:

1. The internal diameter of the pipe must be sufficient to ensure correct fluid velocity, see graph at point 9.9.
2. The first section of the line connected to the pump outlet must be a flexible hose, in order to isolate the vibrations produced by the pump of the rest of the system.
3. Use high pressure pipes and fittings to ensure high safety margins in all operating conditions.
4. The outlet line must always be provided with a Max. pressure valve.
5. Use pressure gauges suitable to withstand pulsating loads typical of the plunger pumps.
6. During the design stage, keep in mind the line load losses which result in a drop in pressure during use with respect to the pressure measured on the pump.
7. For those applications where pulses produced by the pump on the outlet line may prove harmful or unwanted, install a pulsation dampener of sufficient size.

9.9 Calculation of the internal diameter of the duct pipes.
To determine the internal diameter of the duct, refer to the following diagram:
Suction duct
With a flow rate of ~ 52 l/min and a water velocity of 0.5 m/sec. The graph line joining the two scales meets the central scale showing the diameters, corresponding to a value of ~ 45 mm.

Outlet duct
With a flow rate of ~ 52 l/min and a water velocity of 5.5 m/sec. The graph line joining the two scales meets the central scale showing the diameters, corresponding to a value of ~ 16 mm.

Optimal speed:
- Suction: ≤ 0.5 m/sec.
- Outlet: ≤ 5.5 m/sec.

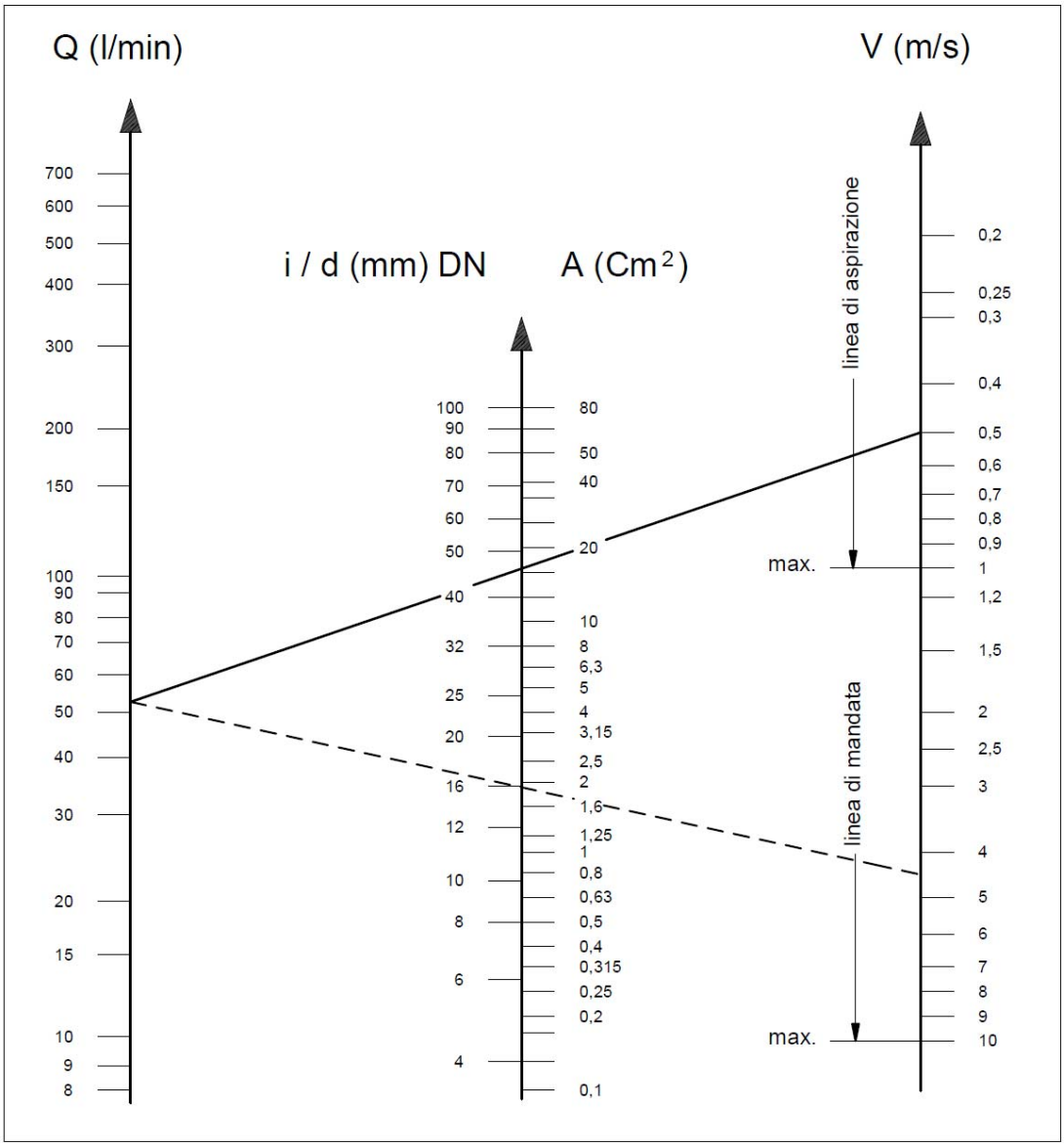

The graph does not take into account pipe resistance, valves, load loss produced by the length of the ducts, the viscosity of the liquid pumped or the temperature itself.
If necessary, contact our ***Technical or Customer Service Departments.***

9.10 V-belt transmission

The pump can be controlled by a v-belt system.
For these pump models, we recommend use of 3 XPB belts (16.5x13 serrated). Use an XPC profile only for long durations. Both the characteristics and transmissible power of each belt can be verified in the diagram in fig. 7, in relation to the number of rpm normally declared by the manufacturer.
Minimum duct pulley diameter (on pump shaft): ≥ 160 mm .
The radial load on the shaft must not exceed 4500 N (value necessary for Layout definition). The transmission is considered adequate if the load is applied to a maximum distance **a=50 mm** from the shaft shoulder (P.T.O) as shown in fig. 10.

For dimensions differing from those specified above, contact our ***Technical or Customer Service Departments.***

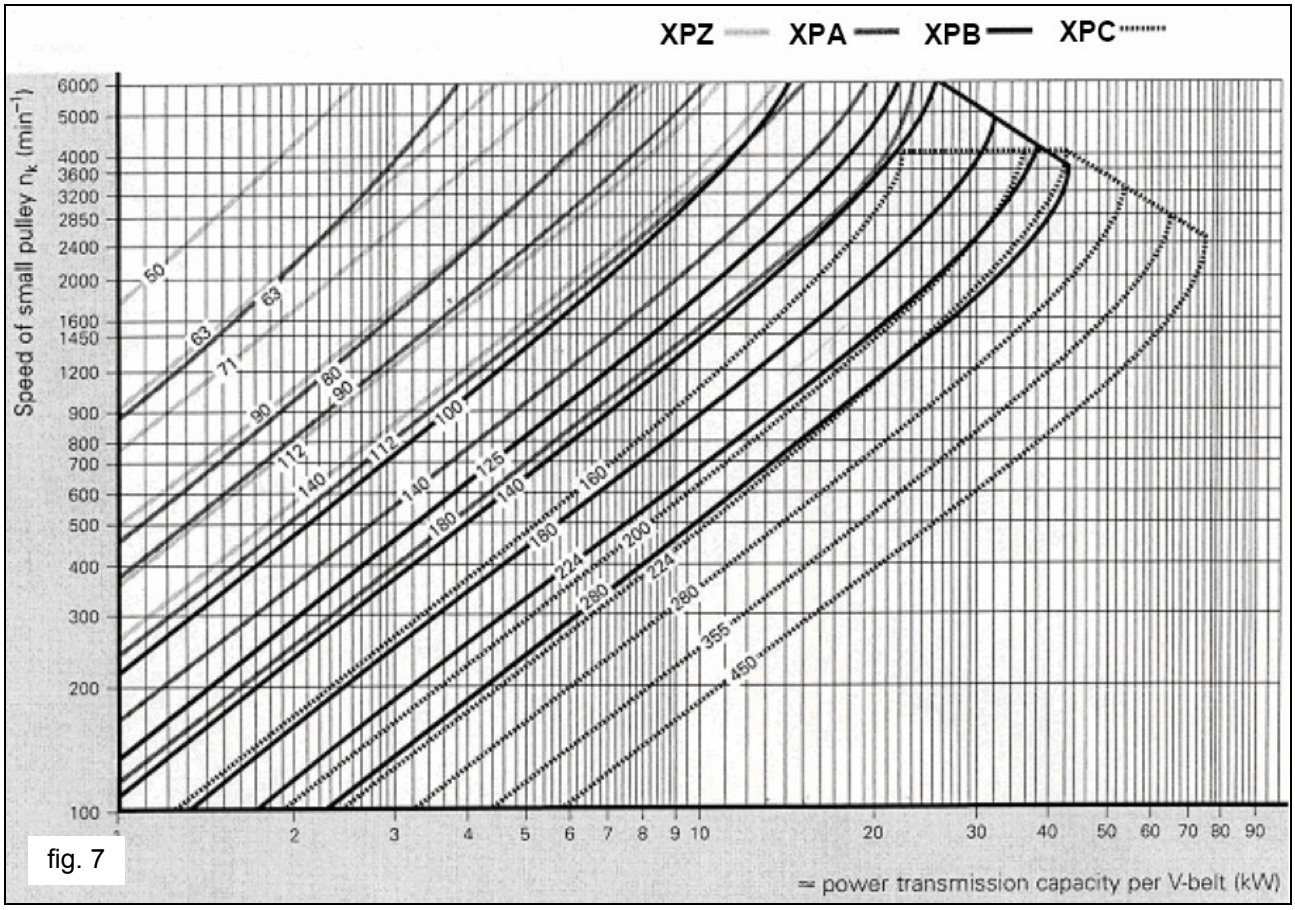

fig. 7

9.11 Transmission definition

To prevent irregular radial loads on the shaft and the relative bearing, follow these directions:

a) Use pulleys with v-belts with the size of the groove required/recommended by the manufacturer of belt used. In the absence of directions, follow fig.8 and the table in fig.9.

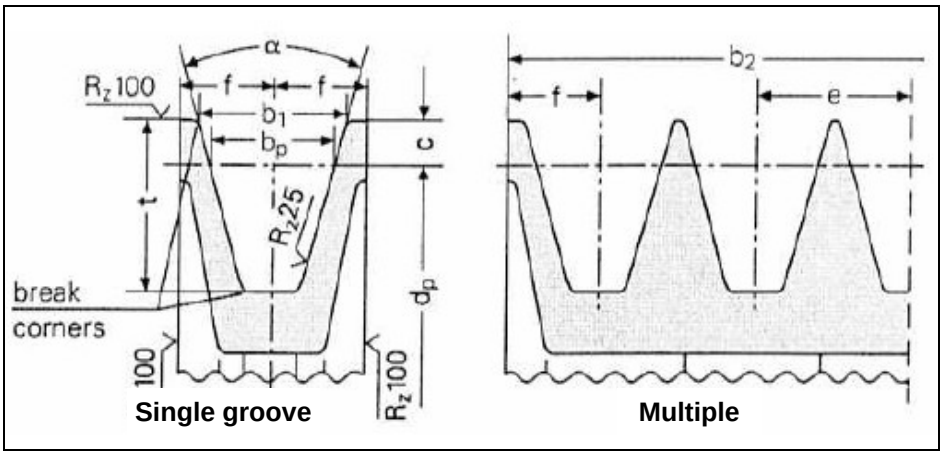

fig. 8

Dimensions (in mm)

Belt section as per DIN 7753 part 1 and B.S. 3790		DIN symbol symbol B.S./ISO	XPB/SPB SPB	XPC/SPC SPC
Belt section as per DIN 2215 and B.S. 3790		DIN symbol symbol B.S./ISO	17 B	22 C
Pitch width		b_w	14.0	19.0
Increased grooving width b_1 ≈		α = 34°	18.9	26.3
		α = 38°	19.5	27.3
		c	8.0	12.0
Distance between grooving		e	23 ± 0.4	31 ± 0.5
		f	14.5 ± 0.8	20.0 ± 1.0
Increased grooving depth t_{min}			22.5	31.5
α	34°	by primitive diameter narrow-section v-belts DIN 7753 part 1 d_w	from 140 to 190	from 224 to 315
	38°		> 190	> 315
α	34°	by primitive diameter classic section v-belts DIN 2215 d_w	from 112 to 190	from 180 to 315
	38°		> 190	> 315
Tolerance for α = 34°-38°			± 1°	± 30’
Pulleys for b2 by grooving number z b2 = (z-1) e + 2 f		1	29	40
		2	52	71
		3	75	102
		4	98	133
		5	121	164
		6	144	195
		7	167	226
		8	190	257
		9	213	288
		10	236	319
		11	259	350
		12	282	381

Minimum pulley diameter must be respected.
Do not use laminated v-belts.

fig. 9

b) Use high performance belts – for example **XPB** instead of **SPB** – as a lower quantity of belts for the same transmitted power may be necessary and a consequent shorter resulting distance compared to the shaft shoulder (P.T.O). “a" of fig. 10

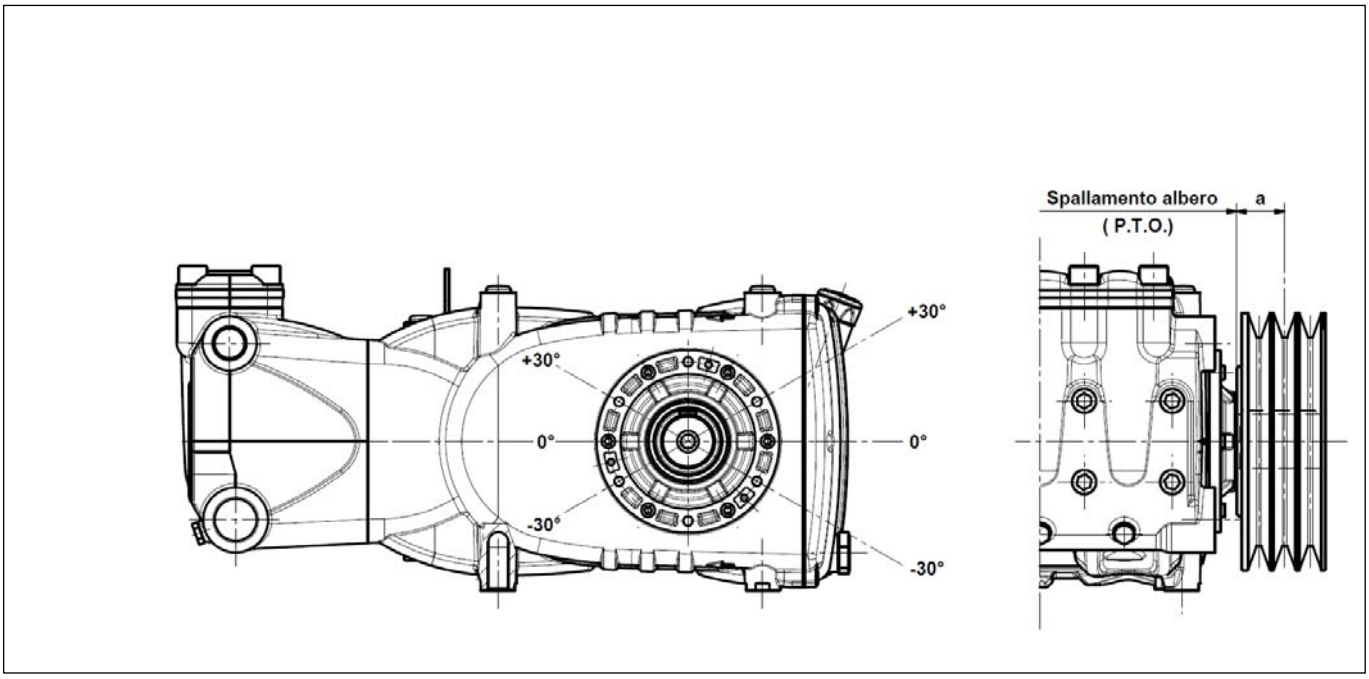

fig. 10

c) Pull the belts according to manufacturer instructions. Excessive pulling can cause reduced bearing life and wear out the pulley prematurely. Pulling depends on different variables as indicated in point 9.12.
d) Belt length has a natural tolerance ≥ ± 0.75%. For this reason, the 3 belts must be purchased as a pair.
e) Follow the direction of the belt pull as shown in fig. 10; for other needs, contact our ***Technical or Customer Service Departments.***
f) Take care of the alignment of the driving pulley and driven pulley grooves.

9.12 Definition of static pull to apply on belts
Static pull depends on:

a) The wheelbase between the two pulleys (belt length).
b) The load due to static pull of the belt.
c) The number of belts.
d) The winding angle of the smallest pulley.
e) Average speed.
f) Etc.

Values of the static pull to be applied can be obtained from the diagram in fig. 11 for belts with a XPB profile in relation to the wheelbase .

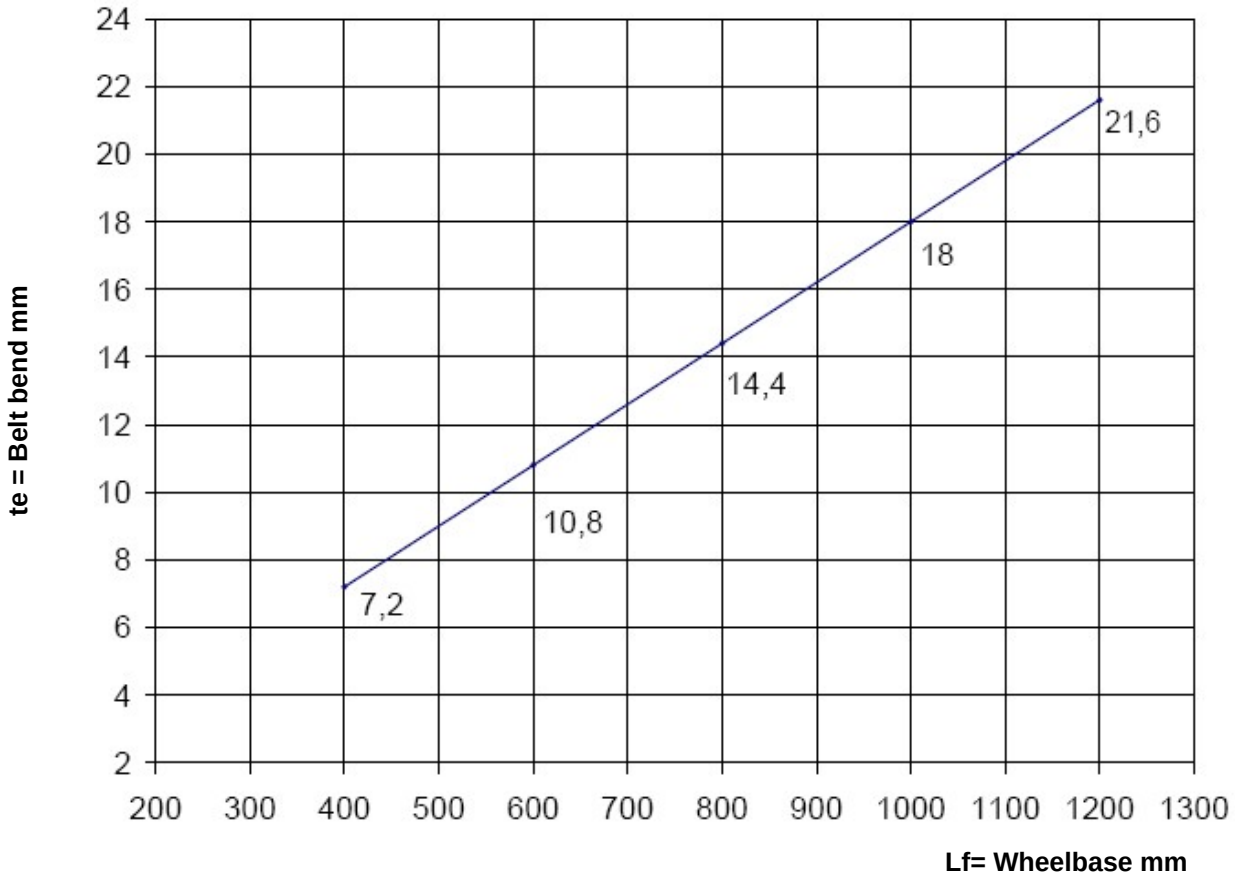

fig. 11

Conclusion: with a wheelbase of 600 mm and with a dynamometer, loading the belt branch with 75 N as indicated in fig 12, a "te" bend of approximately 10.8 mm is obtained.

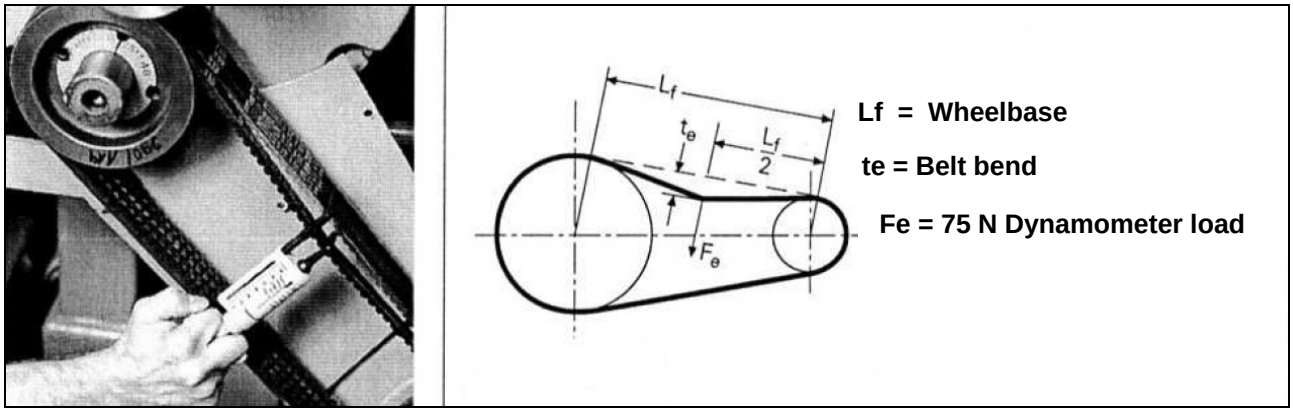

fig. 12

Note$_1$. Unless otherwise stated by the supplier of the belts, control of proper pull and its relative re-tensioning should be performed after no less than 30 minutes of motion necessary for the normal adjustment of the belts. Best performance and durability will be achieved with proper tensioning.

Note$_2$. In case of necessity or for routine maintenance, never replace a single belt but the complete set.

9.13 Transmission of power from the second PTO

Upon request, the KT HIGH PRESSURE version pumps can be supplied with auxiliary PTO on the side opposite of the drive (Transmission of power from the second PTO).

Transmission can be carried out:

- By means of the V-belts.
- By means of the joint.

By means of the V-Belt, withdrawable Max Torque is:
20 Nm which corresponds to:

4.1 Cv to 1450 rpm
5.0 Cv to 1750 rpm

By means of the joint, withdrawable Max Torque is:
40 Nm which corresponds to:

8.2 Cv to 1450 rpm
10 Cv to 1750 rpm

By means of the V-belt, the transmission is considered suitable if:
belt pull is applied at a max distance of 18 mm with from the
bend shaft shoulder (see fig. 13). Min diameter of pulley to be used = Ø 100 mm.

With transmission by means of the joint, pay particular attention to perfect alignment so that no transverse forces are generated on the pump shaft.

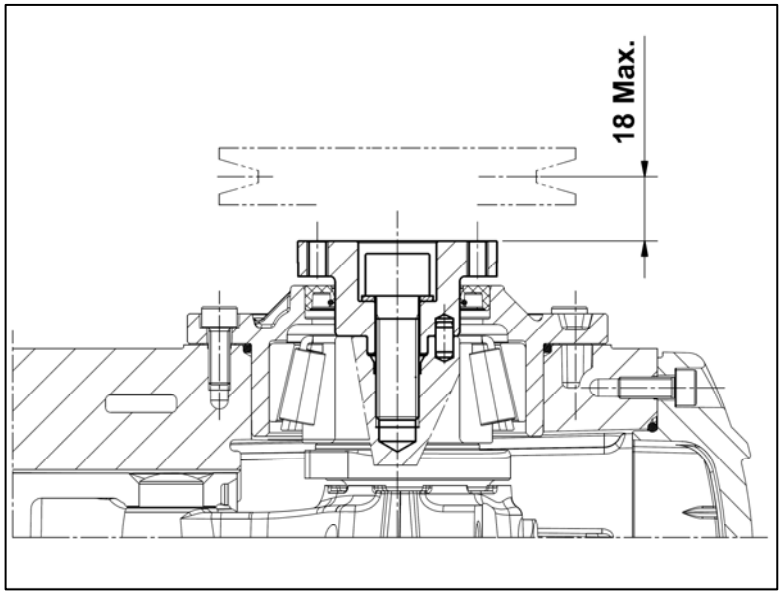

fig.13

For applications differing from those specified above, contact our ***Technical*** or Customer Service ***Departments.***

10. START-UP AND OPERATION

10.1 Preliminary checks
Before start-up, ensure that:

The suction line is connected and pressurised (see Sections 9.4 – 9.5 – 9.6).
The pump should never run dry.

1. The suction line ensures a hermetic seal over time.
2. Any shut-off valves between the supply source and the pump are fully open. The outlet line during is free discharge, to permit air present in the pump head to come out quickly and therefore favour fast priming.
3. All suction and outlet fittings and connections are properly tightened.
4. The coupling tolerances on the pump/transmission axis (half-joint misalignment, Cardan joint tilt, belt pulling, etc.) remain within limits required by the transmission manufacturer.
5. Oil in the pump casing is at level, verified with a dipstick (position 1 fig. 14). and exceptionally with a level indicator (position 2 fig. 14).

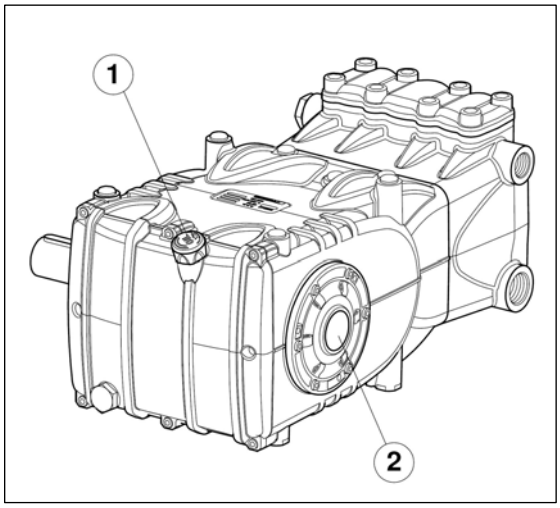

fig. 14

In case of prolonged storage or long-term inactivity, check proper functioning of the suction and outlet valves.

10.2 Start-up
1. At first start-up, verify that the rotation direction and the supply pressure are correct.
2. Start-up the pump without any load.
3. Check that the supply pressure is correct.
4. Check that the rotation rpm during operation does not exceed the nominal rpm of the pump.
5. Let the pump run for a period of no less than 3 minutes, before putting it under pressure.
6. Before each pump stop, reset pressure by means of the control valve or with any relieving devices and reduce to a minimum rpm.
   (activation with combustion motors).

11. PREVENTIVE MAINTENANCE

For pump reliability and efficiency, comply with maintenance intervals as shown in the table.

PREVENTIVE MAINTENANCE	
Every 500 hours	**Every 1000 hours**
Check oil level	Change oil
	Check / Replace * : Valves Valve housings Valve springs Valve guides
	Check / Replace *: H.P. seals L.P. seals

fig. 15

*To replace, follow instructions contained in the repair manual

12. PUMP STORAGE

12.1 Long-term inactivity

If the pump is started for the first time after a long period from the date of shipment, before operation check the oil level, inspect the valves as specified in chapter 10, then follow described start-up procedures.

12.2 Method for filling pump with anti-corrosion emulsion or anti-freeze solution using an external diaphragm pump based on the layout shown in paragraph 9.7 in fig. 6 and fig. 6/a:

- In place of the service tank, use a suitable container containing the solution to be pumped.
- Close the filter drainage, if open.
- Make sure that the hoses to be used are clean inside and spread grease on their connections.
- Connect the high pressure exhaust pipe to the pump.
- Connect the suction pipe to the diaphragm pump.
- Connect the suction pipe between the pump head and the diaphragm pump.
- Fill the service container with solution/emulsion.
- Insert the free ends of the suction pipes and the high pressure exhaust pipe inside the container.
- Switch on the diaphragm pump.
- Pump the emulsion until it exits from the high pressure exhaust pipe.
- Continue pumping for at least another minute.
- Stop the pump and remove the previously connected pipes.
- Clean, grease and plug the connections on the pump head.

The characteristics of the emulsion can be strengthened if necessary by adding, for example, Shell Donax.

13. PRECAUTIONS AGAINST FROST

Follow the instructions in Chapter 12 in areas and times of the year at risk of frost (see point 12.2) .

In the presence of ice, do not run the pump for any reason until the circuit has not been fully defrosted, in order to avoid serious damage to the pump.

14. GUARANTEE CONDITIONS

The guarantee period and conditions are contained in the purchase agreement.
The guarantee will in any case be invalidated if:

a) The pump is used for purposes other than for those agreed upon.
b) The pump is fitted with an electric or combustion motor with performance exceeding those indicated in the table.
c) Safety devices are decalibrated or disconnected.
d) The pump is used with accessories or parts not supplied by Interpump Group.
e) Damage has been caused by:
    1) improper use
    2) failure to follow maintenance instructions
    3) any use different from that described in the operating instructions
    4) lack of sufficient flow rate
    5) defective installation
    6) improper positioning or sizing of pipes
    7) unauthorised plan modifications
    8) cavitation

15. OPERATING FAULTS AND THEIR POSSIBLE CAUSES

The pump does not produce any noise upon start-up:

- The pump is not primed and is running dry.
- No suction water.
- Valves are blocked.
- The outlet line during is closed and does not allow air present in the pump head to come out.

The pump pulsates irregularly:

- Air suction.
- Insufficient supply.
- Bends, elbow bends, fittings along the suction line are choking the passage of liquid.
- The suction filter is dirty or too small.
- The booster pump, where installed, is supplying insufficient pressure or flow rate.
- The pump is not primed for insufficient head or the outlet is closed during priming.
- The pump is not primed for the fixing of some valves.
- Worn valves.
- Worn pressure seals.
- Imperfect functioning of the pressure control valve.
- Problems on the transmission

The pump does not supply the nominal flow rate/excessive noise:

- Insufficient supply (see various causes as above).
- The number of rpms is less than the nominal rate.
- Excessive leakage of the pressure control valve.
- Worn valves.
- Excessive leakage of the pressure seals.
- Cavitation due to:
  1) Improper sizing of suction ducts/undersized diameters.
  2) Insufficient flow rate.
  3) Elevated water temperature.

The pressure supplied by the pump is insufficient:

- Use (nozzle) is or has become higher than the capacity of the pump.
- The number of rpms is insufficient.
- Excessive leakage of the pressure seals.
- Imperfect functioning of the pressure control valve.
- Worn valves.

The pump is overheated:

- The pump is working in pressure excess or the number of rpms is higher than the nominal rate.
- Oil in the pump casing is not at level or not the recommended type as detailed in chapter 7 (see point 7.4) .
- Excess belt tension or joint or pulley alignment is incorrect.
- Excessive pump tilt during operation.

Vibrations and shock to pipes:

- Air suction.
- Imperfect functioning of the pressure control valve.
- Valve malfunction.

Non-uniformity in the transmission motion.

16. EXPLODED DRAWING AND PARTS LIST

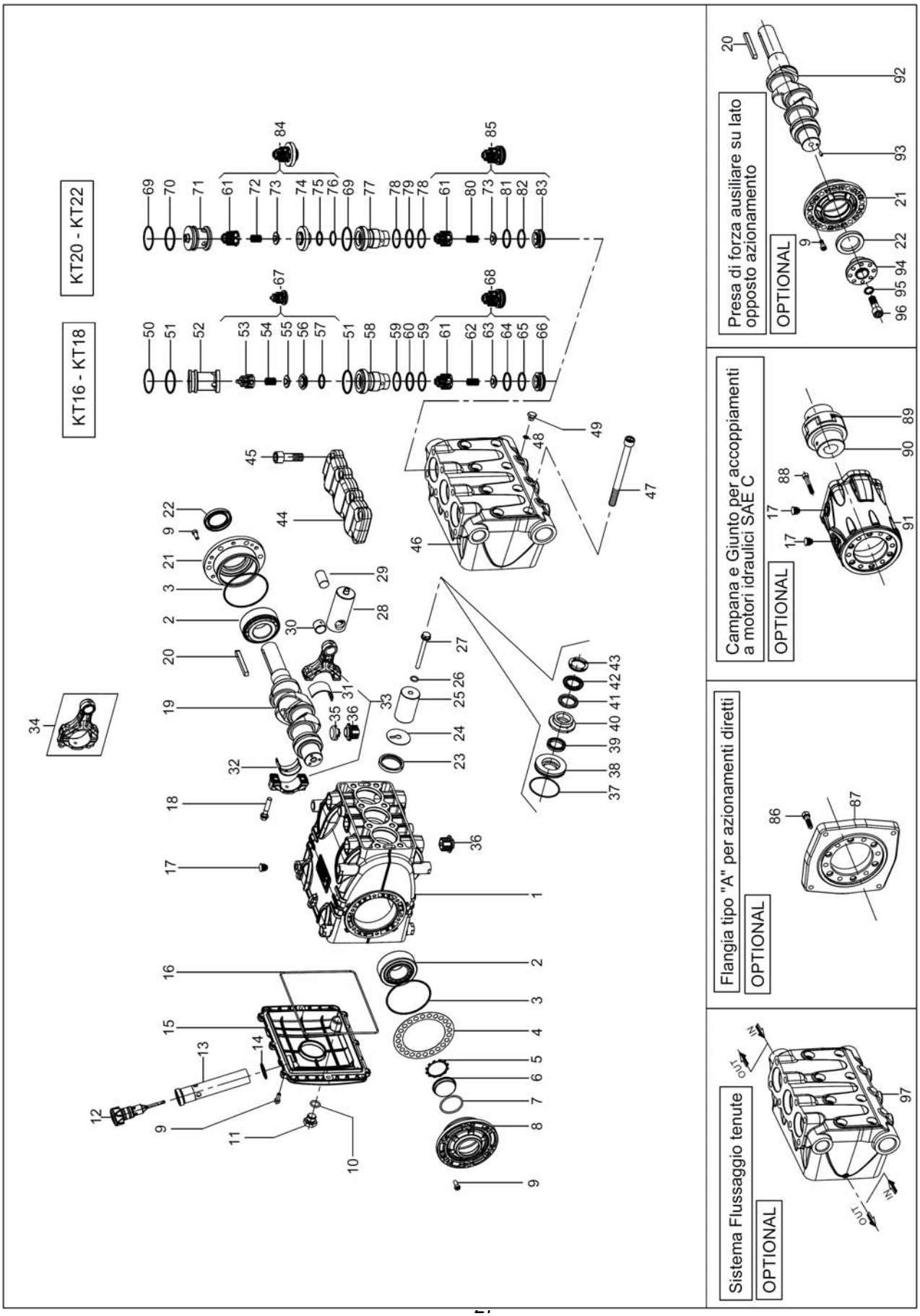

	KIT RICAMBIO – SPARE KIT	KT16 WK525	KT18 WK530	KT20	KT22
A	Kit tenute pompanti – Plunger packing kit	KIT 2227	KIT 2228	KIT 2229	KIT 2230
B	Kit valvole aspirazione – In valves kit	KIT 2031		KIT 2022	
C	Kit valvole mandata – Out valves kit	KIT 0150		KIT 2023	
D	Kit tenute complete – Complete seals kit	KIT 2231	KIT 2232	KIT 2233	KIT 2234
E	Kit bronzine bielle – Conrod bushing kit	KIT 2156 (STD.) - 2157 (+0,25) - 2158 (+0,50)			

INTERPUMP GROUP

WK 525
WK 530

Pratissoli

KT16
KT18
KT20
KT22

INTERPUMP GROUP

POS	CODE CODICE	DESCRIPTION DESCRIZIONE	KIT	NR. PCS.
1	70.0100.22	CARTER POMPA		1
2	91.8477.00	CUSCINETTO RULLI CON. 33207		2
3	90.3915.00	OR D. 80.60x2.62 NBR 70SH 3318	D	2
4	70.2200.81	SPESSORE DI RASAMENTO 0.1 MM		1
	70.2203.81	SPESSORE DI RASAMENTO 0.25 MM		
5	90.0756.00	ANELLO SEEGER D. 45	D	1
6	70.2118.01	SPIA LIVELLO OLIO		1
7	90.3877.00	OR D. 39.34x2.62 NBR 70SH	D	1
8	70.1501.22	COPERCHIO CUSCINETTO LATO SPIA		1
9	99.1854.00	VITE M06X16 5931 8.8 ZINC		20
10	90.3833.00	OR D. 13.95x2.62 NBR 70SH 3056	D	1
11	98.2100.50	TAPPO G 3/8x13 TE22 - ZINC.		1
12	98.2115.00	TAPPO CON ASTA D. 21.5x70		1
13	72.2106.95	TUBO PER ASTA LIVELLO OLIO		1
14	90.3604.00	OR D. 25,12x1,78 NBR 70SH 2100	D	1
15	70.1606.22	COPERCHIO POSTERIORE CARTER		1
16	90.3942.00	OR D. 190.17x2.62 NBR 70SH 3750	D	1
17	98.2005.00	TAPPO PER FORO D. 15		5
18	99.3123.00	VITE SERRAGGIO BIELLA M8x1x42		6
19	70.0206.35	ALBERO A GOMITI C.26		1
20	91.4900.00	LINGUETTA 8h9x7x70 UNI 6604/A		1
21	70.1500.22	COPERCHIO CUSCINETTO LATO PTO		1
22	90.1668.00	ANELLO RAD. D. 35x52x7 VITON	D	1
23	90.1677.00	ANELLO RAD. D. 36x47x6/7.5	D	3
24	96.7099.00	ROSETTA D. 10x45x1		3
25	70.0400.09	PISTONE D. 20x63		3
	70.0401.09	PISTONE D. 22x63		
	70.0410.09	PISTONE D. 16x63		
	70.0411.09	PISTONE D. 18x63		
26	90.3584.00	OR D. 10.82x1.78 NBR 90SH 2043	D	3
27	70.2241.36	VITE FISSAGGIO PISTONE		3
28	70.0500.15	GUIDA PISTONE		3
29	97.7420.00	SPINOTTO D. 18x36		3
30	90.9100.00	BOCCOLA PIEDE BIELLA		3
31	90.9220.00	SEMIBOCC. TESTA BIELLA - SUP.	E	3
	90.9221.00	SEMIBOCC. TESTA BIELLA S.+0.25	E	
	90.9222.00	SEMIBOCC. TESTA BIELLA S.+0.50	E	
32	90.9223.00	SEMIBOCC. TESTA BIELLA - INF.	E	3
	90.9224.00	SEMIBOCC. TESTA BIELLA I.+0.25	E	
	90.9225.00	SEMIBOCC. TESTA BIELLA I.+0.50	E	
34	70.0305.01	BIELLA COMPLETA		3
35	71.2259.51	CAPPUCCIO TAPPO CARTER		3
36	70.2225.51	TAPPO CARTER		6
37	90.3626.00	OR D. 50.52x1.78 NBR 70SH 2200	A-D	3

POS	CODE CODICE	DESCRIPTION DESCRIZIONE	KIT	NR. PCS.
38	70.0817.66	ANELLO DI FONDO D. 16		3
	70.0818.66	ANELLO DI FONDO D. 18		
	70.0819.66	ANELLO DI FONDO D. 20		
	70.0820.66	ANELLO DI FONDO D. 22		
39	90.2631.00	ANELLO TEN.ALT.D. 16x24x6,5 L.P.	A-D	3
	90.2688.00	ANELLO TEN.ALT.D. 20x28x5,5 L.P.	A-D	
	90.2713.00	ANELLO TEN.ALT.D. 22x30x5,5 L.P.	A-D	
	90.2648.00	ANELLO TEN.ALT.D. 18x26x5,5 L.P.	A-D	
40	70.2245.66	ANELLO INTERMEDIO D. 16		3
	70.2246.66	ANELLO INTERMEDIO D. 18		
	70.2247.66	ANELLO INTERMEDIO D. 20		
	70.2248.66	ANELLO INTERMEDIO D. 22		
41	90.2687.00	ANELLO "RESTOP" 18x32x6,2/3	A-D	3
	90.2640.00	ANELLO "RESTOP" 16x30x6,2/3	A-D	
	90.2704.00	ANELLO "RESTOP" 20x35x5,5/2	A-D	
	90.2730.00	ANELLO "RESTOP" 22x35x5,5/2	A-D	
42	90.2705.00	ANELLO TEN.ALT.20x35x7,5/4,5 H.P.	A-D	3
	90.2725.00	ANELLO TEN.ALT.22x35x7/4,5 H.P.	A-D	
	90.2686.00	ANELLO TEN.ALT.18x32x7/4,5 H.P.	A-D	
	90.2642.00	ANELLO TEN.ALT.16x30x7/4 H.P.	A-D	
43	70.1000.51	ANELLO DI TESTA PISTONE D. 20		3
	70.1001.51	ANELLO DI TESTA PISTONE D. 22		
	71.1000.51	ANELLO DI TESTA PISTONE D. 18		
	47.1003.51	ANELLO DI TESTA PISTONE D. 16		
44	70.2240.36	COPERCHIO VALVOLE		1
45	99.4850.00	VITE M14x40 UNI 4762		8
46	70.1255.36	TESTATA POMPA D. 16		1
	70.1256.36	TESTATA POMPA D. 18		
	70.1257.36	TESTATA POMPA D. 20-22		
47	99.3828.00	VITE M10x140 UNI 5931		8
48	90.3576.00	OR D. 6,75x1,78 NBR 70SH 106	D	3
49	98.1972.00	TAPPO G 1/8"x8		3
50	90.5177.50	ANELLO ANTIEST. D.30,9x35x1,5 - KT16/18	D	3
51	90.3866.00	OR D. 29,82x2,62 NBR 90SH 3118 - KT16/18	D	6
52	70.2243.66	TAPPO D. 35 - KT16/18		3
53	36.2025.51	GUIDA VALVOLA - KT16/18		3
54	94.7376.00	MOLLA D. 9,4x14,8 - KT16/18		3
55	36.2032.66	VALVOLA SFERICA - KT16/18		3
56	36.2003.66	SEDE VALVOLA - KT16/18		3
57	90.3841.00	OR D. 17,30x2,62 NBR 70 SH 3068 - KT16/18	D	3
58	70.2242.66	BUSSOLA VALVOLE - KT16/18		3
59	90.5165.00	ANELLO ANTIEST. D. 24,7x29x1,5 - KT16/18	D	6
60	90.3858.00	OR D. 23,81x2,62 NBR 70 SH 132 - KT16/18	D	3
61	36.2103.05	GUIDA VALVOLA		6÷3

POS	CODE CODICE	DESCRIPTION DESCRIZIONE	KIT	NR. PCS.
62	94.7397.00	MOLLA D. 11,4X20 - KT16/18		3
63	36.2050.66	VALVOLA SFERICA - KT16/18		3
64	90.3856.00	OR D. 23,47x2,62 NBR 90 SH 3093 - KT16/18	D	3
65	90.5155.00	ANELLO ANTIEST. D. 23,9x28x2 - KT16/18	D	3
66	36.2049.66	SEDE VALVOLA - KT16/18		3
67	36.7121.01	GR. VALVOLA ASPIRAZIONE - KT16/18	C	3
68	36.7144.01	GR. VALVOLA DI MANDATA - KT16/18	B	3
69	90.3878.00	OR D. 39,34x2,62 NBR 90 SH 3156 - KT20/22	D	6
70	90.5220.00	ANELLO ANTIEST. D. 40,9x45x1,5 - KT20/22	D	3
71	71.2110.70	TAPPO D. 45 - KT20/22		6
72	94.7401.00	MOLLA D. 12x17 - KT20/22		3
73	36.2039.66	VALVOLA SFERICA - KT20/22		6
74	36.2043.66	SEDE VALVOLA - KT20/22		3
75	90.3851.00	OR D. 21,89x2,62 NBR 70 SH 3087 - KT20/22	D	3
76	90.5145.00	ANELLO ANTIEST. D. 22,9x27x1,5 - KT20/22	D	3
77	70.2244.66	BUSSOLA VALVOLE - KT20/22		3
78	90.5179.00	ANELLO ANTIEST. D. 31,4x35,5x1,5 - KT20/22	D	6
79	90.3866.00	OR D. 29,82x2,62 NBR 70 SH 3118 - KT20/22	D	3
80	94.7397.00	MOLLA D. 11,4x20 - KT20/22		3
81	90.3866.00	OR D. 29,82x2,62 NBR 70 SH 3118 - KT20/22	D	3
82	90.5177.00	ANELLO ANTIEST. D. 30x34,5x1,5 - KT20/22	D	3
83	36.2042.66	SEDE VALVOLA - KT20/22		3
84	36.7139.01	GR. VALVOLA DI MANDATA - KT20/22	C	3
85	36.7138.01	GR. VALVOLA ASPIRAZIONE - KT20/22	B	3
97	-	TESTATA POMPA - FLUSHING		1
CON FLANGIA "A" – WITH DIRECT DRIVE FLANGE				
86	99.3084.00	VITE M08X30 5931 8.8 ZINC		6
87	10.0673.20	FLANGIA MOT. IDRAULICO TIPO A		1
MOTORE IDR. SAE-B – SAE-B HYDR. MOTOR DRIVE				
17	98.2005.00	TAPPO PER FORO D .15		2
88	99.3136.00	VITE M08X45 5931 12.9 G321		6
89	10.0755.47	ELEMENTO ELASTICO GIUNTO D. 46		1
90	10.7430.01	GIUNTO ELASTICO D. 30x25.4		1
91	10.0752.20	FLANGIA MOT. IDRAULICO SAE-B		1
PDF AUSILIARIA – AUXILIARY PTO				
9	99.1854.00	VITE M06X16 5931 8.8 ZINC		6
20	91.4900.00	LINGUETTA 8h9x7x70 UNI 6604/A		1
21	70.1500.22	COPERCHIO CUSCINETTO LATO PTO		1
22	90.1668.00	ANELLO RAD. D. 35x52x7 VITON		1
92	70.0205.35	ALBERO A GOMITI C.23 D.PTO		1
93	97.6152.00	SPINA D. 5x10		1
94	70.2234.54	DISPOSITIVO DOPPIA PTO S.70		1
95	96.7160.00	ROSETTA D. 12X18X1 DIN988		1
96	99.4295.00	VITE M12X35 5931 12.9 G321		1

Pratissoli

17. FLUSHING CIRCUIT DIAGRAM OF USE

Adhere to the following values for proper system operation:
minimum circuit flow rate 4 L/min, maximum fluid pressure 6 bar.

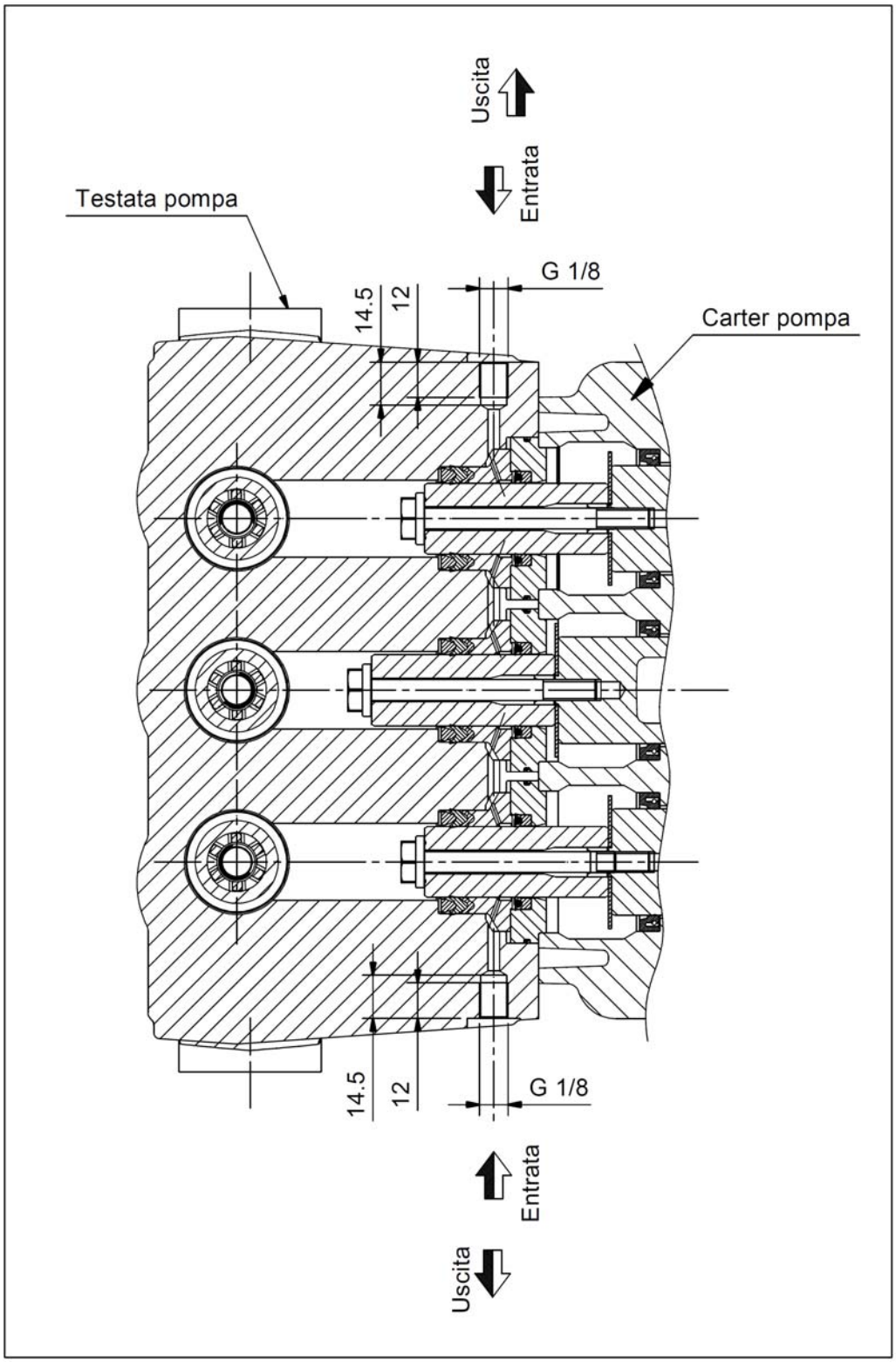

18. DECLARATION OF INCORPORATION

DECLARATION OF INCORPORATION

(In accordance with Annex II of European Directive 2006/42/CE)

The manufacturer **INTERPUMP GROUP S.p.A.** – Via E. Fermi, 25 – 42049 S. ILARIO D'ENZA (RE) – Italy
Name: Pump
Type: Reciprocating plunger pump for high pressure water
Trademark: INTERPUMP GROUP
Model: KT- WK525 – WK530

Comply with Machinery Directive 2006/42/EC.
Applied standards: UNI EN ISO 12100:2010 – UNI EN 809:2000

The pump identified above meets all the essential safety and health protection requirements as listed in section 1 of Annex I of the Machinery Directive:
1.1.2 – 1.1.3 – 1.1.5 – 1.3.1 – 1.3.2 – 1.3.3 – 1.3.4 – 1.5.4 – 1.5.5 – 1.6.1 – 1.7.1 – 1.7.2 – 1.7.4 – 1.7.4.1 – 1.7.4.2 and the relevant technical documentation has been compiled in accordance with Annex VII B.
In addition, the manufacturer undertakes to make available, following a reasoned request, a copy of the relevant technical pump documentation in the manner and terms to be defined.

The pump should not be put into service until the plant to which the pump is to be incorporated has been declared in accordance with the provisions of the relevant directives and/or standards.

Person authorised to compile the technical file:

Name: Maurizio Novelli

Address: INTERPUMP GROUP S.p.A – Via E. Fermi, 25 – 42049 – ILARIO D'ENZA (RE) – Italy

Person authorized to draw up the declaration:

CEO Mr. Paolo Marinsek

Reggio Emilia, December 2012

Signature

Copyright

Copyright of these operating instructions is property of Interpump Group.
The instructions contain technical descriptions and illustrations which may not be entirely or in part copied or reproduced electronically or passed to third parties in any form and in any case without written permission from the owner.

Violators will be prosecuted according to law with appropriate legal action.

Cod.70981203- Cod.IE 2860000142 – 27/03/2013
Data contained in this document may change without notice.

PRATISSOLI a brand of INTERPUMP GROUP S.P.A.
42049 S.ILARIO - REGGIO EMILIA (ITALY)
Tel. ***+39 - 0522 - 904311*** Fax ***+39 - 0522 - 904444***
E-mail: info@pratissolipompe.com
http://www.pratissolipompe.com